USED ON
–

DWG NO. C-110551

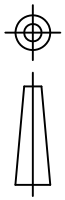

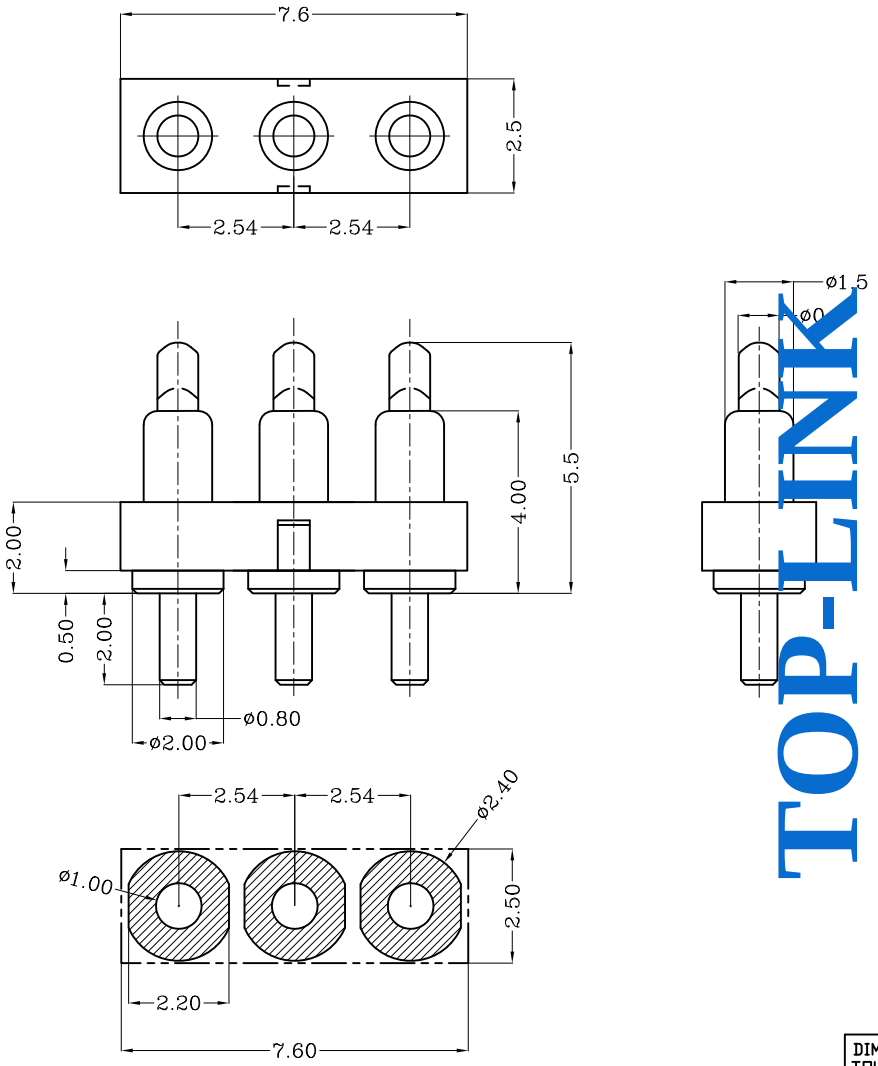

Recommended PCB Layout

Notes:

1 Material, Housing: PA 4.6 (30% Glass Filled)
Color Black.
Contact: Brass

2 Mechanical demands:
Plating Plunger: Min 0.1um Au over 1.25um Ni
Plating Body: Min 0.075um Au over 1.25um Ni.

3 Mechanical
1)Total stroke : 1.4mm

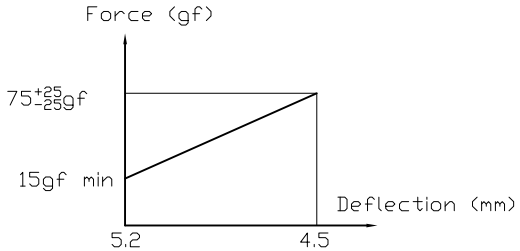

TOP-LINK

110551-3

PART NUMBER

DIMENSIONS IN MM TOLERANCES UNLESS OTHER SPECIFIED 0 = ±- 0.0 = ±0.15 0.00 = ±0.10 0.000 = ± ANGLE: ±1° SURF TEXTURE: 3.2 REMOVE BURRS. BREAK SHARP EDGES R0.05 MAX DO NOT SCALE PRINT	MATL 1	HT TR —	FIN —
	DWN Qin	APVD	Top-Link Electronics Ltd.
	CHK	REL	
	NAME POGO CONNECTOR 3 POSITIONS PGC-1.5-5.5-R-3P-2.54PH		
	SCALE 1:1	A4	DWG NO. C-110551	SHEET 1 OF 1	REV A

LTR	REVISION RECORD	APVD	DATE
	NEW		2009/09/27

LOC –
DIST –

THIS INFORMATION IS CONFIDENTIAL AND IS DISCLOSED TO YOU ON CONDITION THAT NO FURTHER DISCLOSURE IS MADE BY YOU TO OTHER THAN TOP-LINK PERSONNEL WITHOUT WRITTEN AUTHORIZATION FROM TOP-LINK LTD.